D-Lev

DIGITAL THEREMIN

“Invented in New Jersey”

by

Eric Wallin

About Me

- Since teens: EE hobbyist, folk guitar
- Variety of manufacturing and engineering adjacent jobs, unfortunately mostly mechanical
- BSEE & MSEE (UVA)
- Lucent brought me to beautiful Boonton in 1998
- Decade of Telecom FPGA digital design work
- Took the package to work on my HIVE soft processor

FPGA

- Field Programmable Gate Array
- Sea of digital logic interconnected via switches
- Programmed using HDL (Hardware Description Language)
- Slow & power hungry, often a solution in search of problem
- Good match w/ Theremin (accident waiting to happen)

The Theremin

- One of very first electronic musical instruments
- Invented 1919 by Leon Theremin
- Capacitive fields for pitch and volume, no physical contact
- Notoriously difficult to play
- Constrained by physics
- Originally “Etherphone” then “Termenvox”

The Theremin

- Similar to some 1950's metal detectors
- Can be made from a handful of parts (e.g. Moog Melodia)

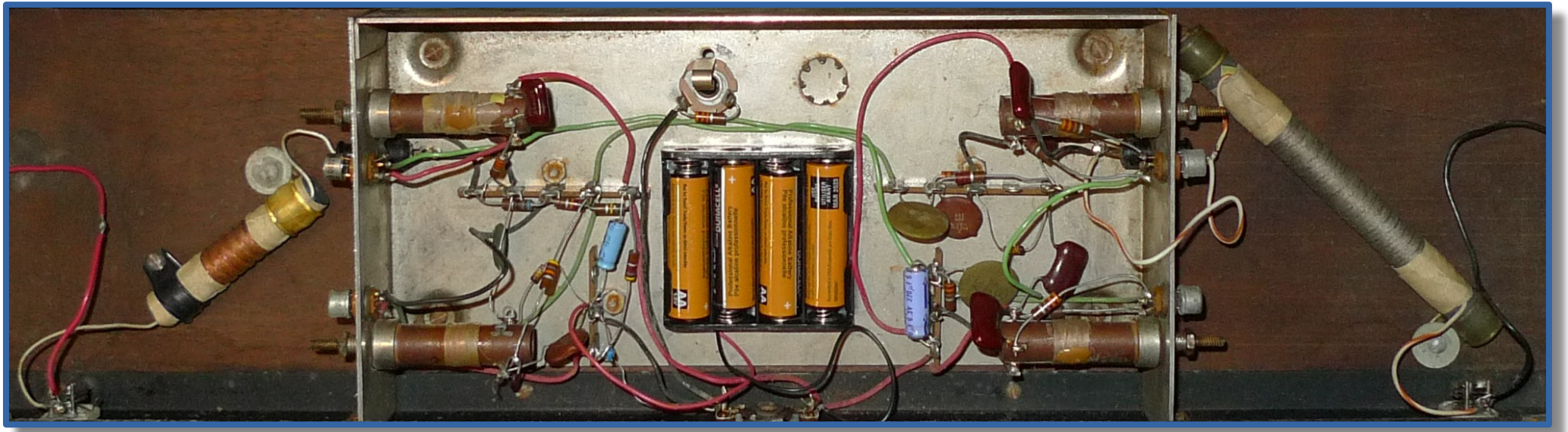

Leon Theremin

- Born *Lev Sergeyevich Termen* 1896 Russia
- Conservatory cellist
- Degree in physics / EE
- Lenin demonstration in 1922
- Toured the world
- Played the Met in 1928, stayed in US
- Patented the Theremin in 1928
  - Sold rights to RCA, 500 units @ $3k
- Developed other instruments:
  - Terpsitone, Theremin Cello, Rhythmicon

Leon Theremin

- Debt, bad investments
- Returned to the Soviet Union in 1938
- Stalinist purge, imprisoned until 1947
- Oppressive government surveillance
- Spy technology (“The Thing”)
- Died 1993 (age 97) in Moscow
- *Theremin: An Electronic Odyssey*
- *Theremin: Ether Music and Espionage*

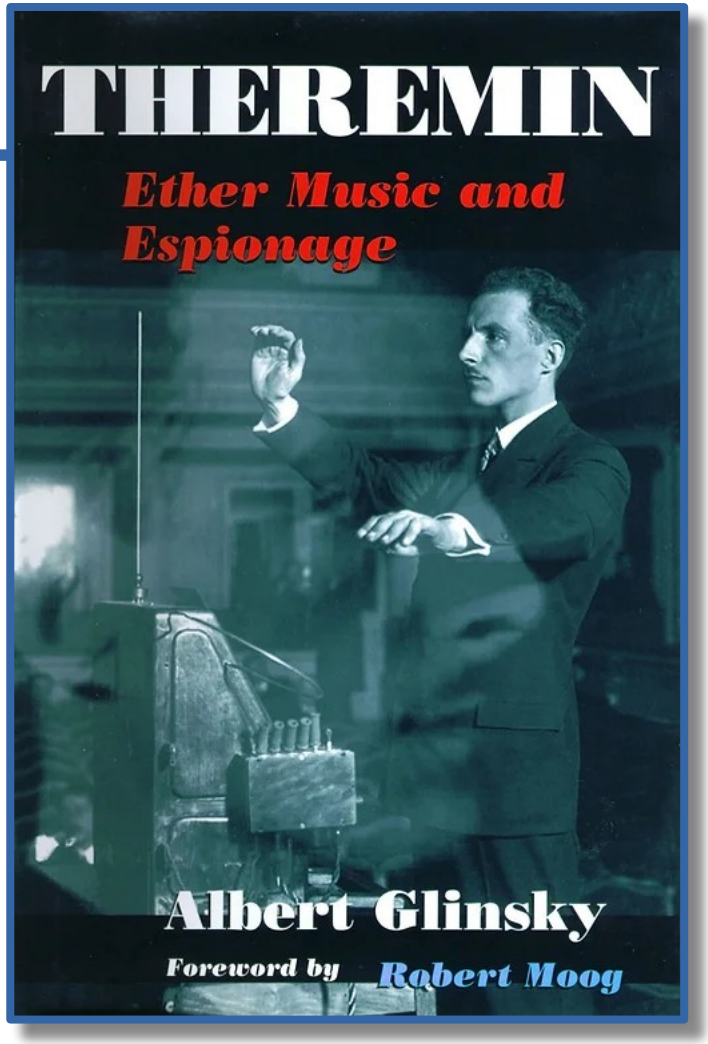

Robert Moog

- Towering figure in synth world
  - Modular, Mini-Moog, etc.
- Born in 1934 NYC
- BS, BSEE, PhD in EE & Physics
- Built first Theremin at age 14
- Designed & published his own in 1953
- Funded college selling kits & parts
- One patent (ladder filter)
- Died 2005 (age 71) leaving a vacuum

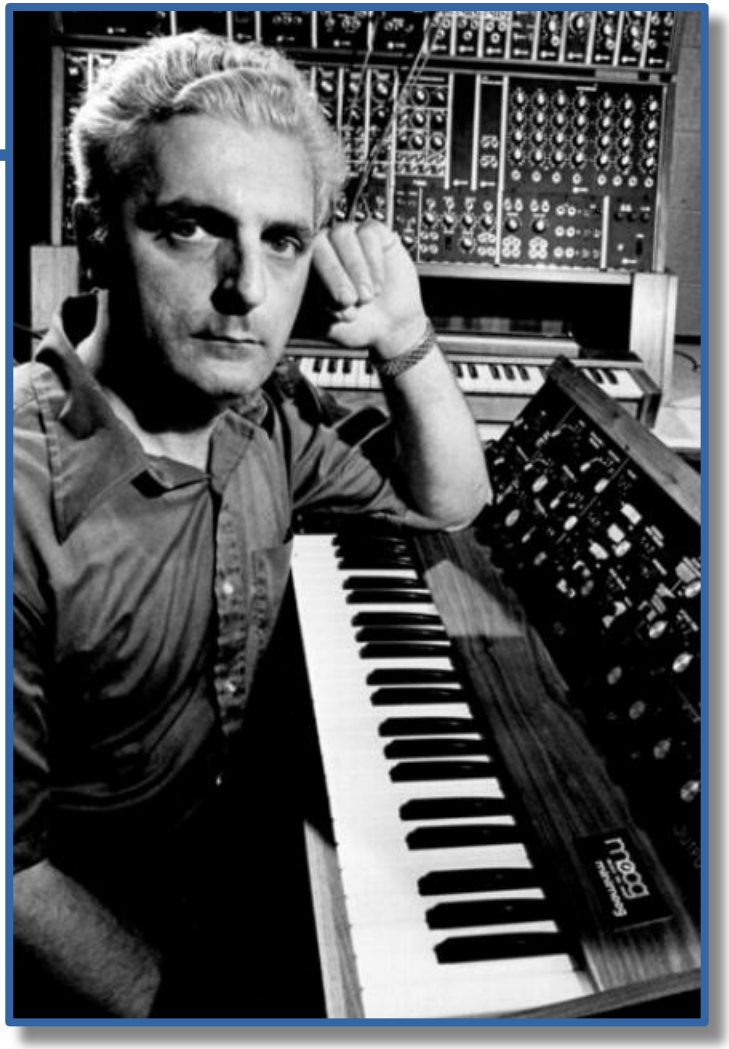

Moog Theremins

- Several early tube models
- Melodia 1961
- Big Briar 1991
- Etherwave 1996
- Ethervox 1998

Moog Etherwave Pro

- 2004 state of the art
- Bob’s final design
- Good linearity
- No MIDI?
- Questionable ergonomics
- Fragile, almost museum piece
- 1500 made, scarce, pricey

Theremin Capacitance Sensing

- Operates in Reactive Near Field
- LC oscillator good trade-off of sensitivity vs. stability, Q boost
- Usually < 1MHz operation (VLF)
- “Antenna” very short for the wavelength => “electrode”
- Very weak RF emissions
- Must be highly responsive, no perceptible lag (100Hz / 10ms)
- Must reject mains hum, RF, etc.

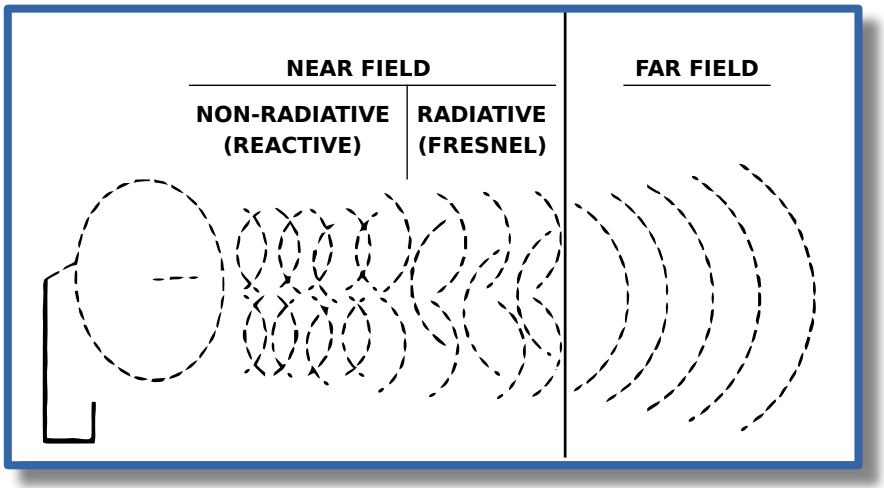

Antenna & Hand Capacitance

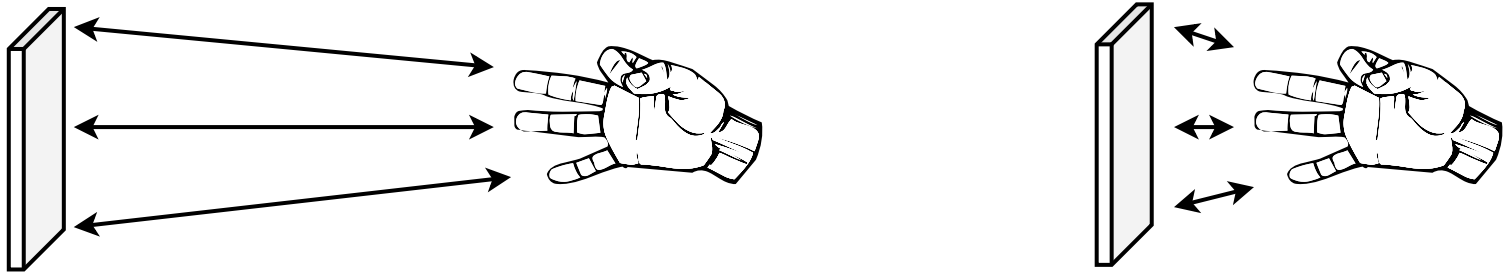

- One hand alone is 10pF (with the universe – intrinsic)
- Hand 24 & 12 inches away, capacitance is 0.2pF & 1.2pF
- 1.2pF - 0.2pF = 1pF difference
- Need to measure 1/1000 this (femto-Farads!) for musical control
- One millionth billionth of a Farad!
- Amazing it works at all (stable, responsive)

Analog vs. Digital

- **Analog fields & audio generation locked together**

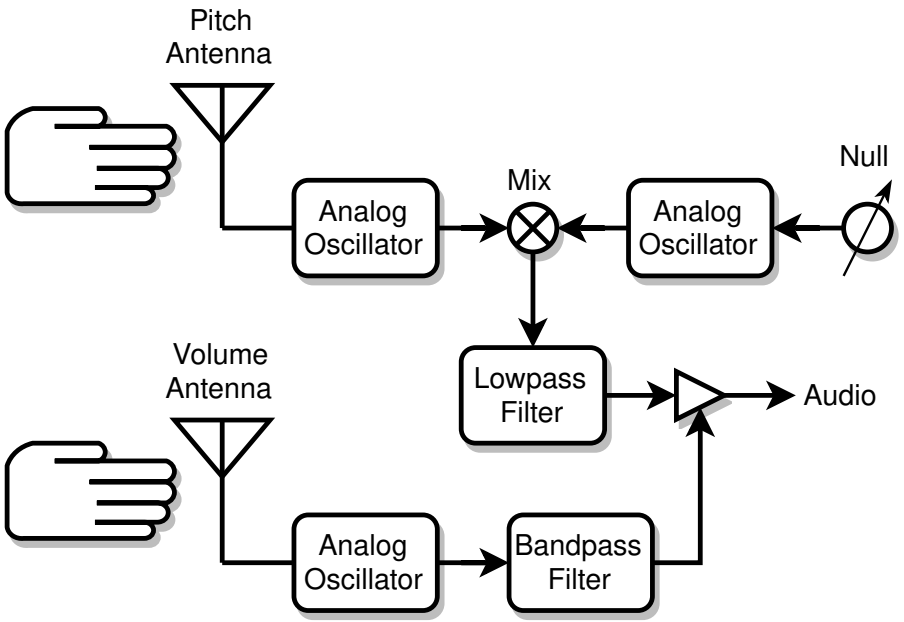

- **Digital fields & audio generation independent**

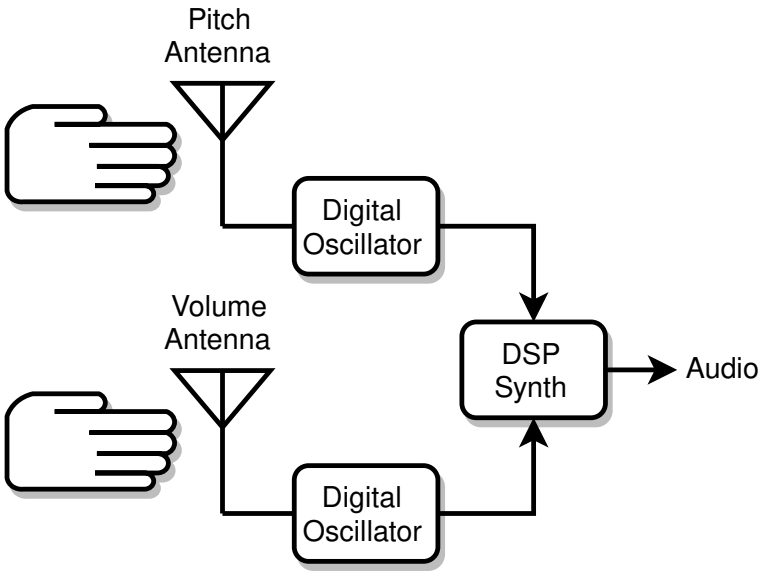

The D-Lev

- D(igital)-Lev (Termen)
- 2012 to present (!)
- Linear / shaped fields
- Pitch & volume display
- Pitch correction
- Modal synthesis
- Hive soft processor
- FPGA hardware basis
- Open source

D-Lev Architecture

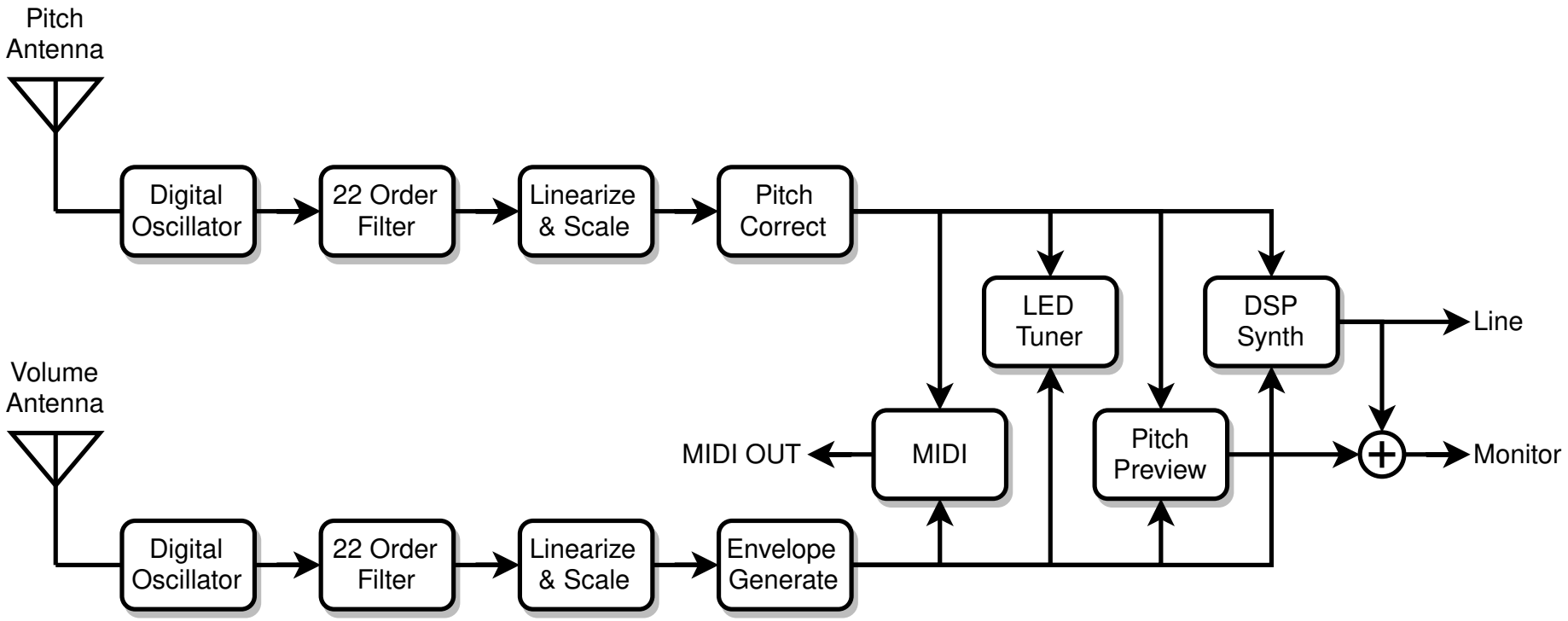

Fields Linearization

- Linear pitch field a holy grail
- Method discovered by me in 2017
- A form of gamma correction: y = x^0.25

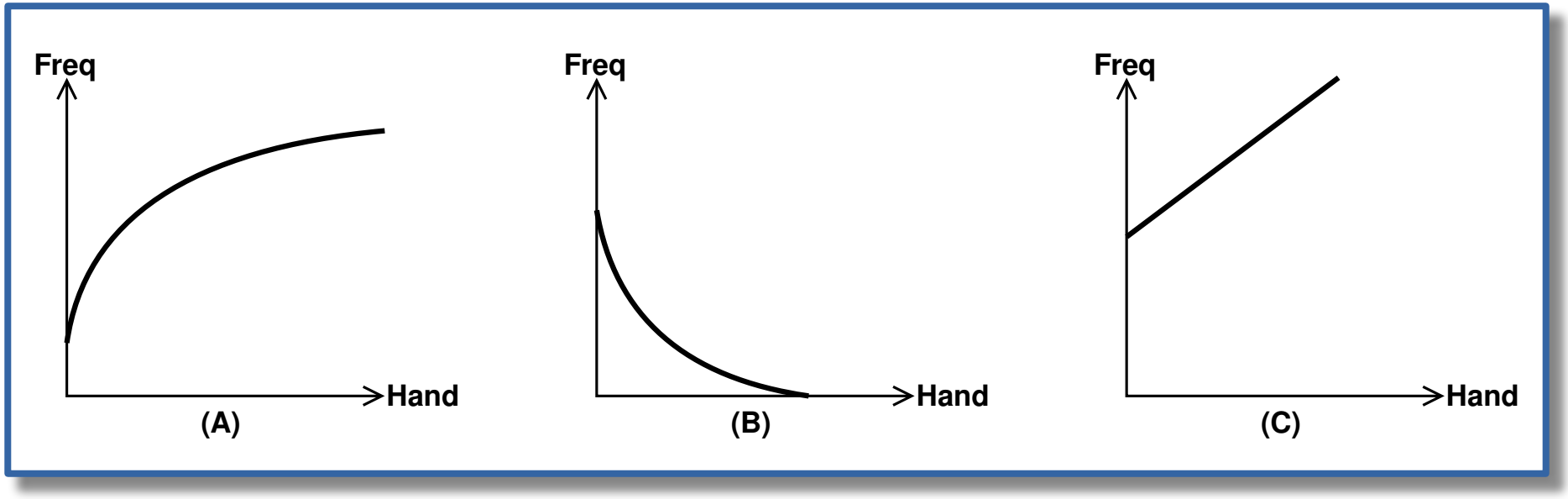

Volume Field Shaping

- **Short shrift from designers**
- **Linear basis**
- **Linear response not desirable**
- **Knee: linear gain break**
- **Drop: 2nd order non-linear curve**

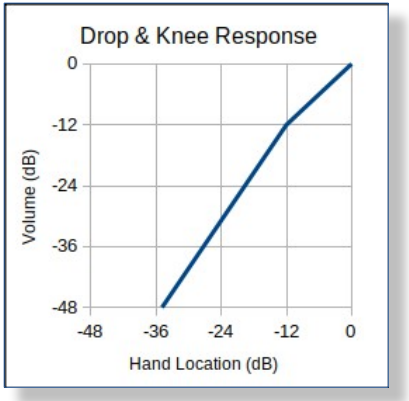

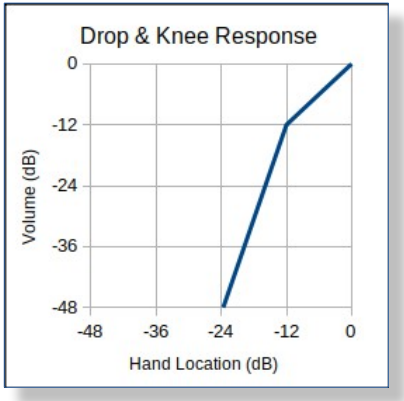

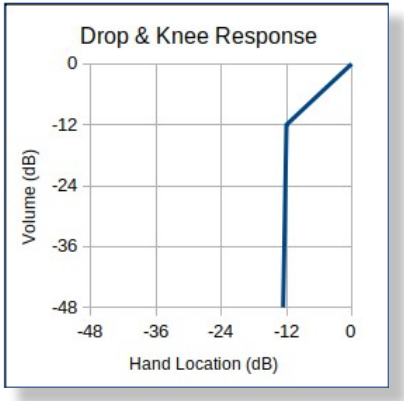

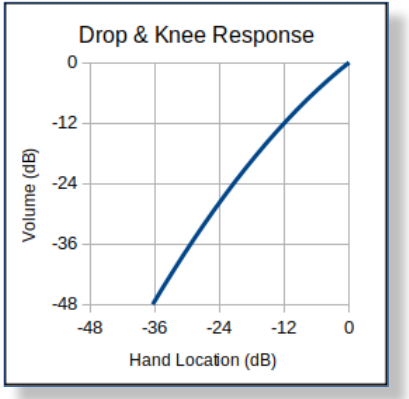

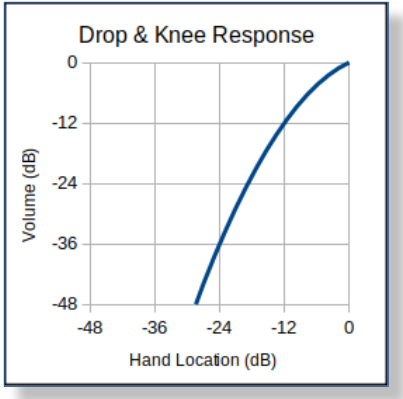

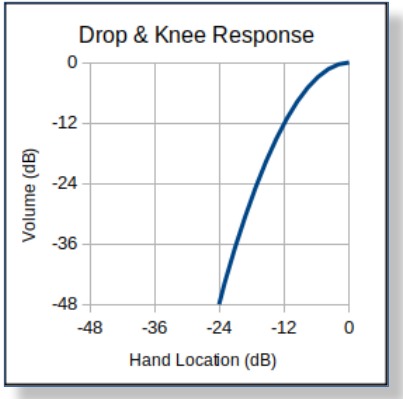

Pitch Correction

- Controversial – virtuosity lost with “Auto-Tune” overuse
- Theremin crying out for it
- 90% just slowed quantization
- Aggressive but unobtrusive
- Note center rate modulation
- Bi-modal filter for smooth glissando
- Volume rate modulation
- Chromatic only
- Requires absolute reference

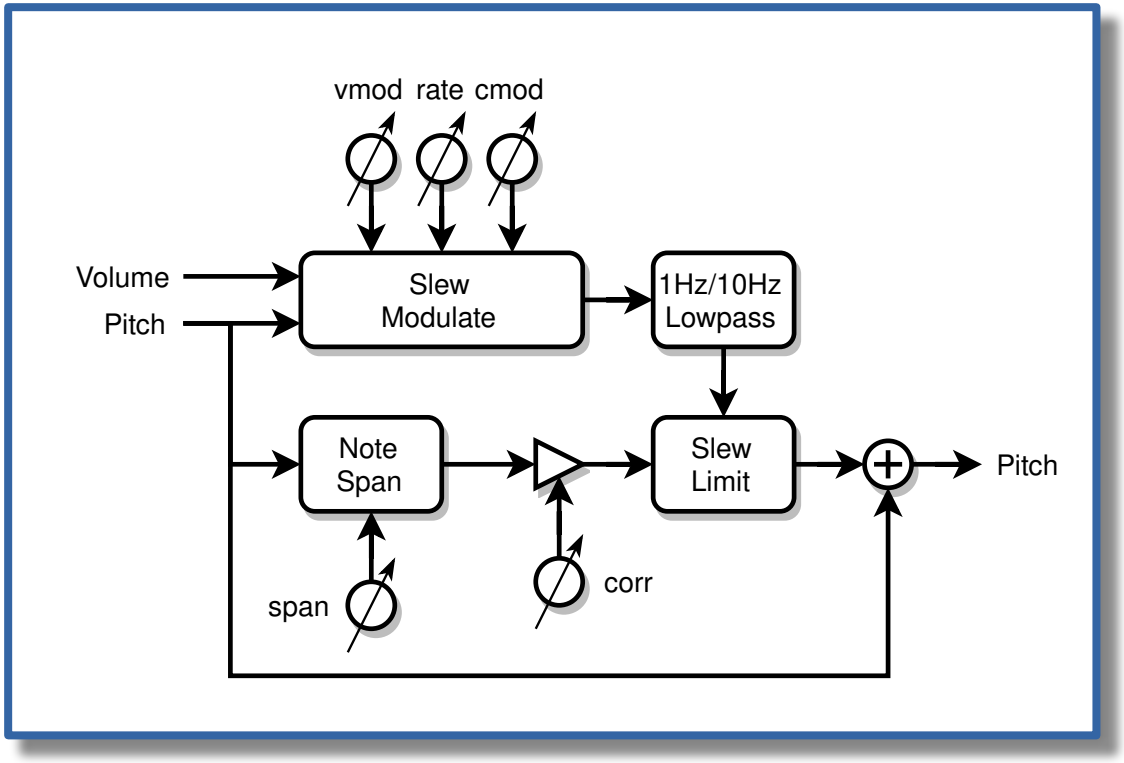

LED “Tuner”

- **Responsive display of pitch & volume**
- **Real-time feedback**
- **Come in on pitch after silence**
- **Patterns reveal key**
  - ***Crown & House***

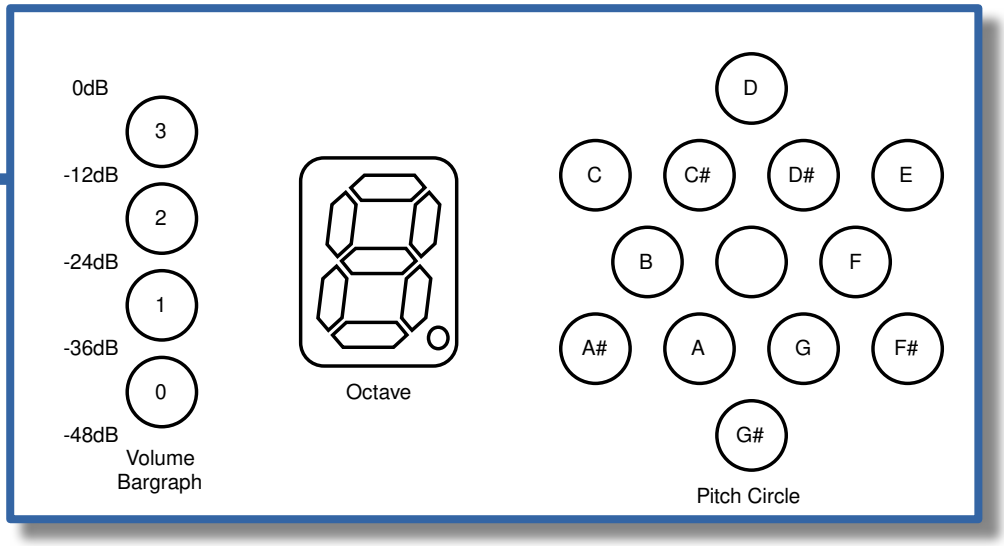

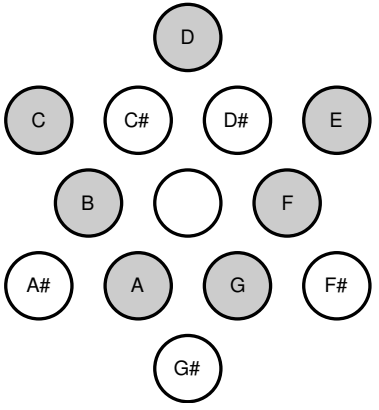

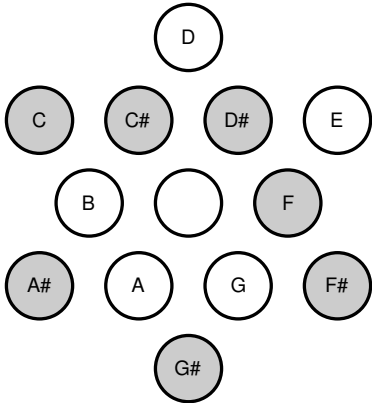

Pitch Preview

- Player pitch monitor
- Come in on-pitch after silence
- Pro feature
- Largely unnecessary when tuner present
- 4th oscillator / DC stimulus when unused

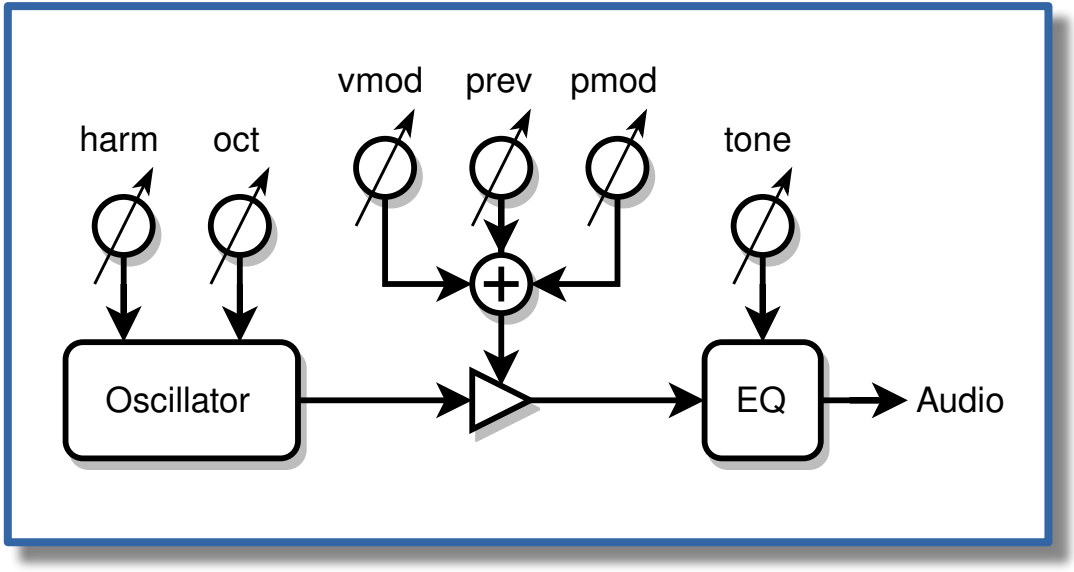

MIDI Module

- **Musical Instrument Digital Interface (1983)**
- **Transmit only (no RX)**
- **Sends pitch & volume hand information to external synth**
- **Note on/off, velocity, pitchbend, CC, 7/14 bit**
- **More full-featured than most**
- **Can be used in tandem with D-Lev synth**

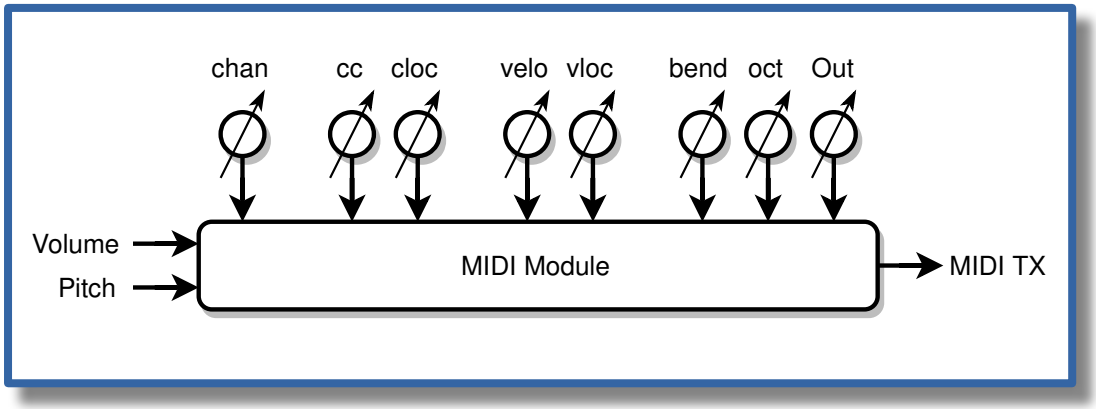

D-Lev DSP Synthesizer

- **VOCALS, strings, brass, woodwinds, bells, animals, UFOs, Theremins, etc.**

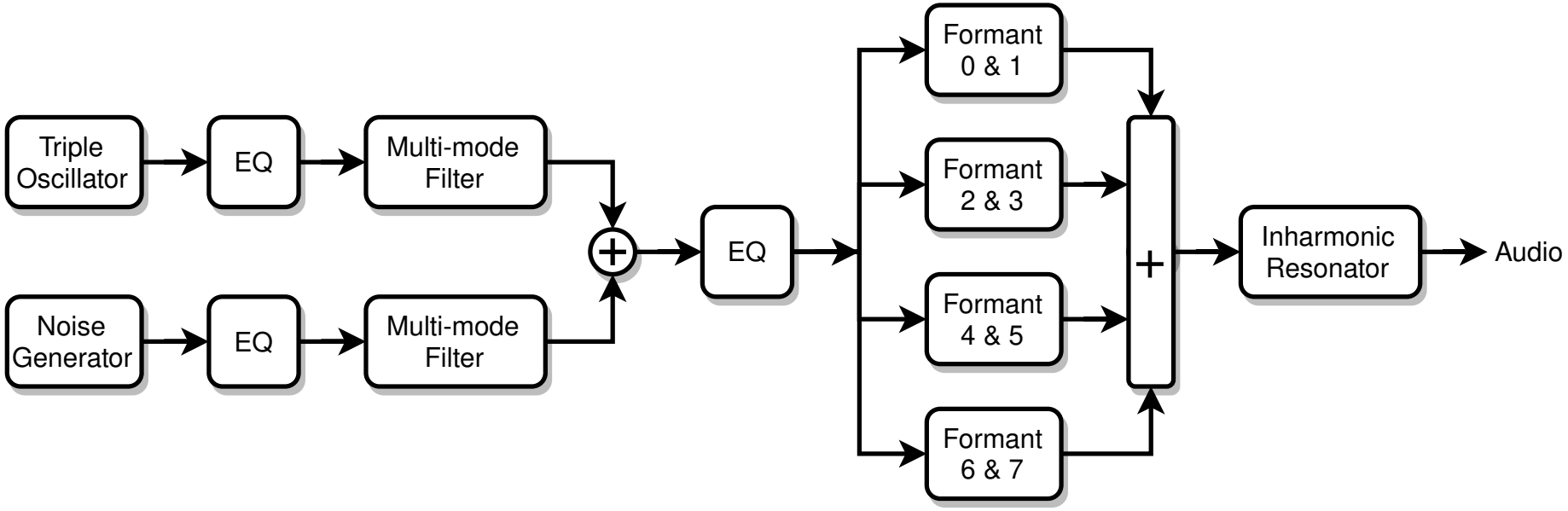

Modal Synthesis

- Simple excitation + a bunch of resonant filters
- Good at mimicking real-world sounds
- Classification of acoustic sources by resonances:
  - Horn: 1
  - Human vocals: 5 to 7
  - Violin / cello: 30 to 100
  - Cymbal: 1000
- D-Lev DSP synth has 8 formant filters
- Inharmonic Resonator upper fill

Cello Synthesis

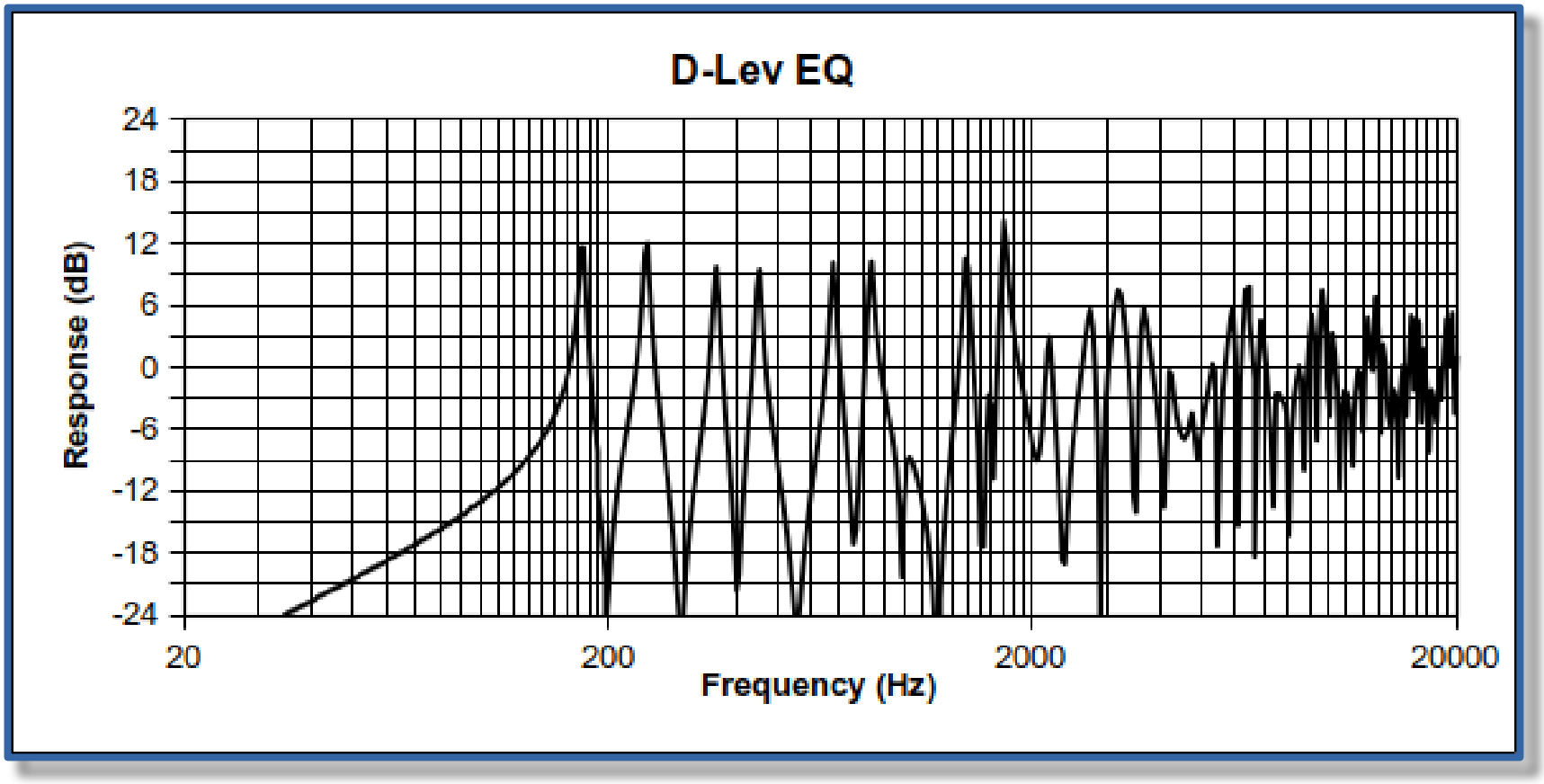

Triple Oscillator

- Center & two offset
- Reduced alias PM oscillator (1979)
- Patent: US4249447
- All / odd harmonic mix
- Brightness modulation
- FM (cross) & AM (ring) modulation
- EQ (bass & treble)
- Multi-mode filter

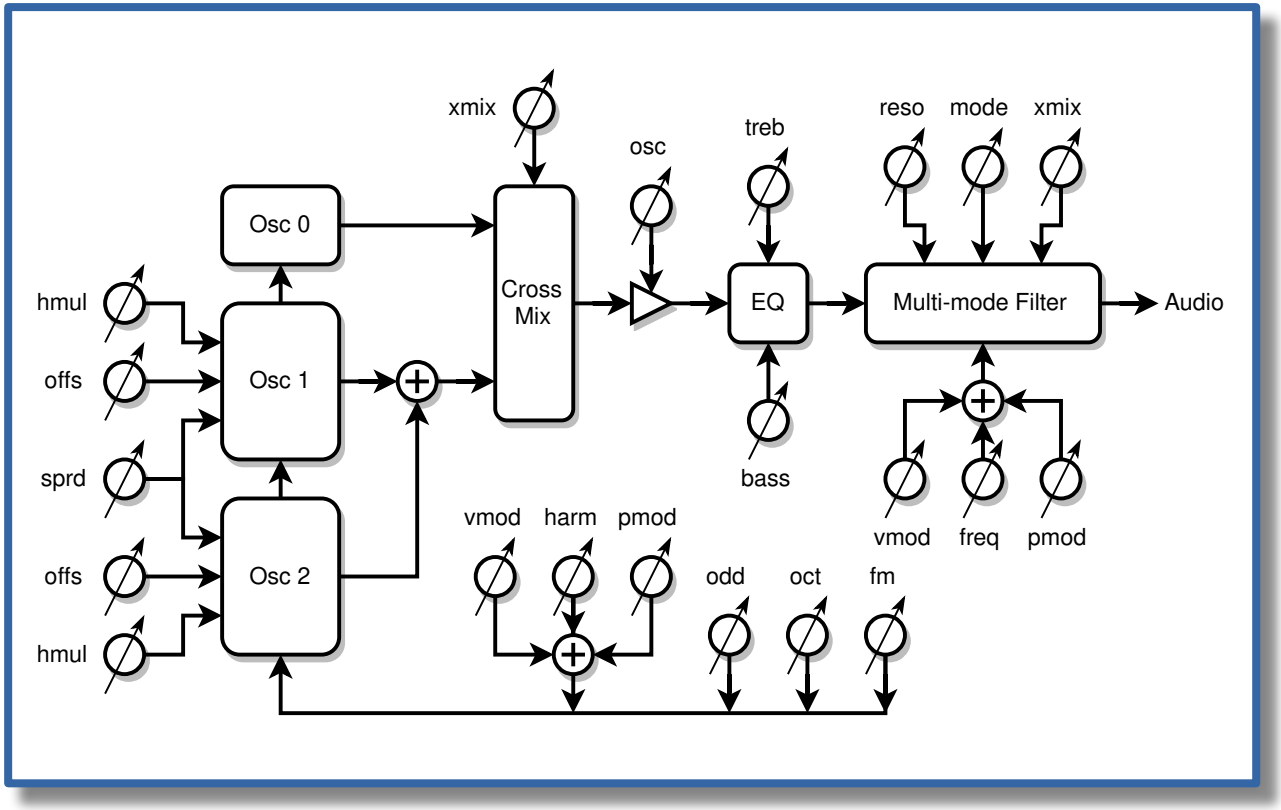

Noise Source

- **Pink noise (1/f) better basis, easier to EQ**
- **Voss-McCartney algorithm**
- **AM “puffs” via Oscillator PM**
- **EQ (bass & treble)**
- **Multi-mode filter**

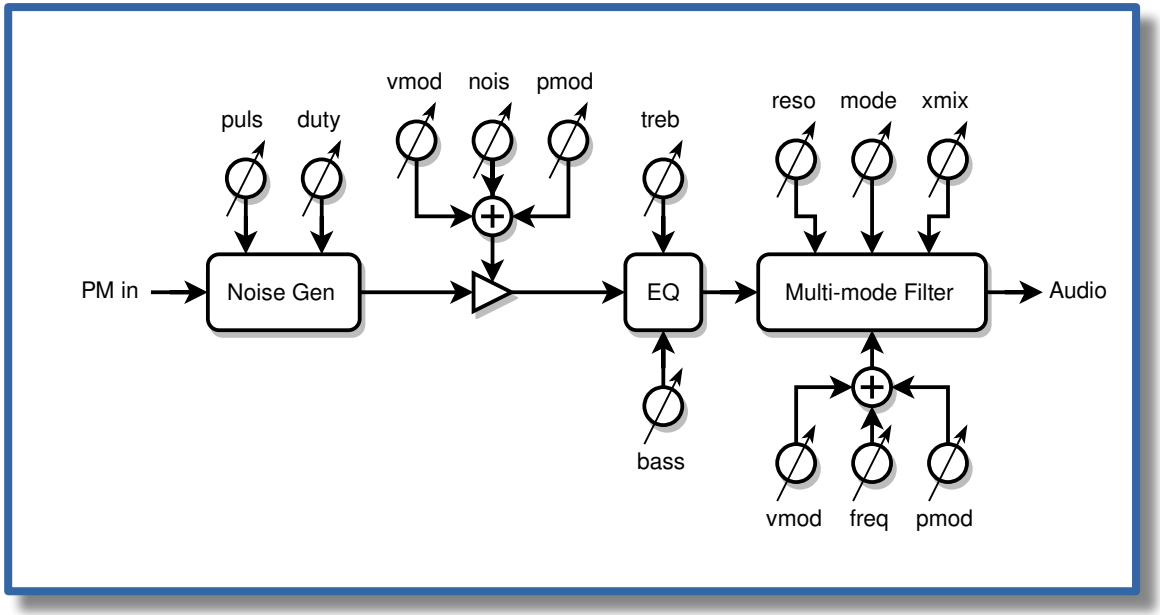

Formant Bank

- Eight 2nd order band-pass filters in parallel
- Chamberlin (1980)
- Independent
  - Fc (resonance frequency)
  - Level
- 4 pairs each share
  - Fc modulation
  - Q (resonance)

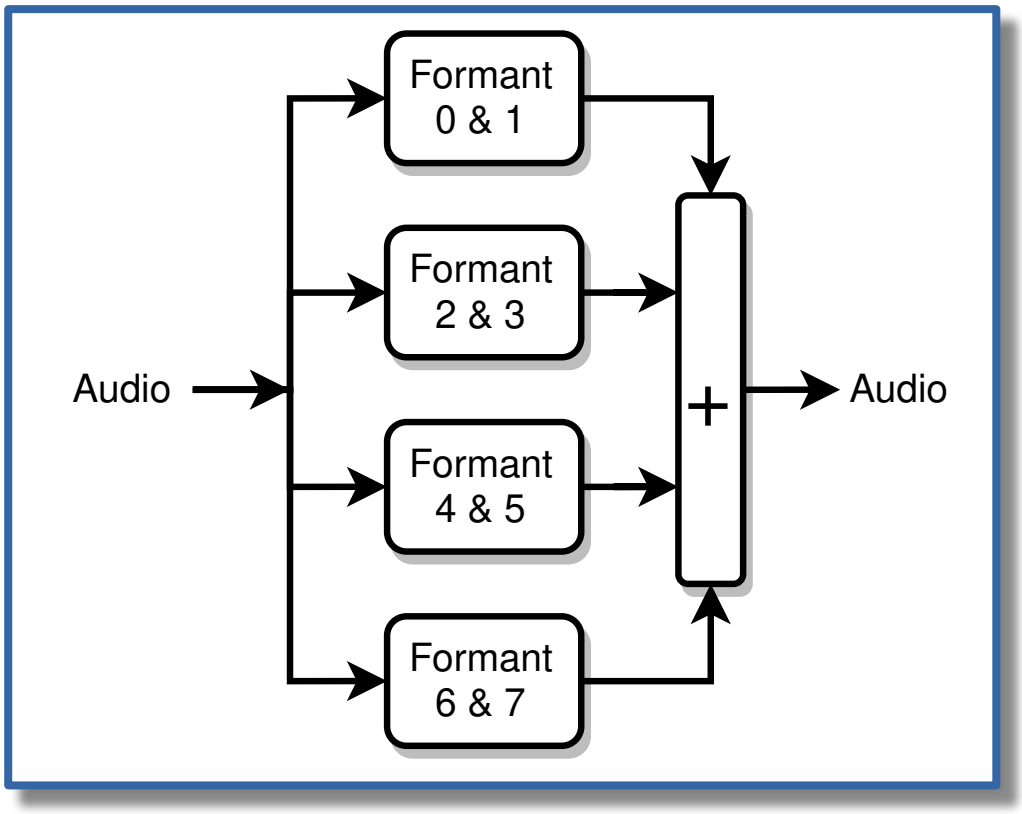

Inharmonic Resonator

- Delay-based filter
- Paper: Jae hyun Ahn & Richard Dudas
- Absorptive all-pass + simple delay, recirculated
- AP breaks up strict harmonic resonance locations
- String body resonances, drums, bells, gongs, human vocals
- Small room ambiance
- Pseudo stereo

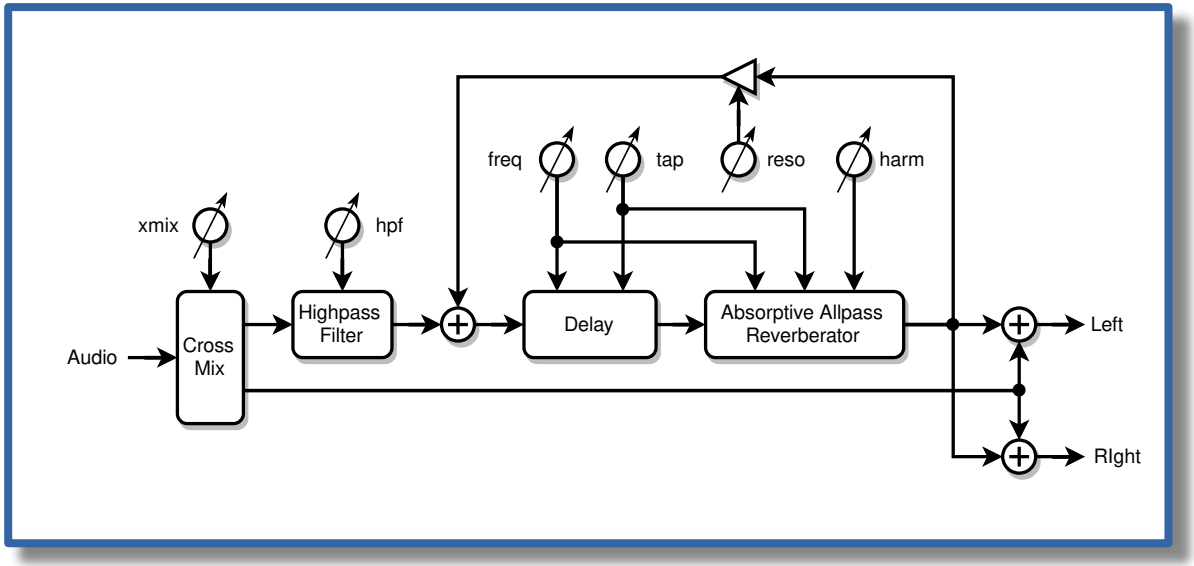

Presets Creation

- Beauty part: instantaneous setup of entire synth
- 250 preset slots, 6 system profile slots
- Long-term activity, integral to synth development
- Synths live & die by their factory presets
- Not a sample playback instrument
- Spectral analysis + research + mapping to synth = effort
- Discovering what makes an instrument “tick”
- Various timbres require different playing techniques to sound realistic – stretch exercise
- Users can create, modify, save, share presets

HIVE

- Barrel pipelined
- 8 threads
- 8 stack set / thread
- 32 bit / 180 MIPS
- 16kB memory
- Tooling:
  - Simulator
  - Assembler & language
  - Integer & float libraries
- Incredibly intense learning experience

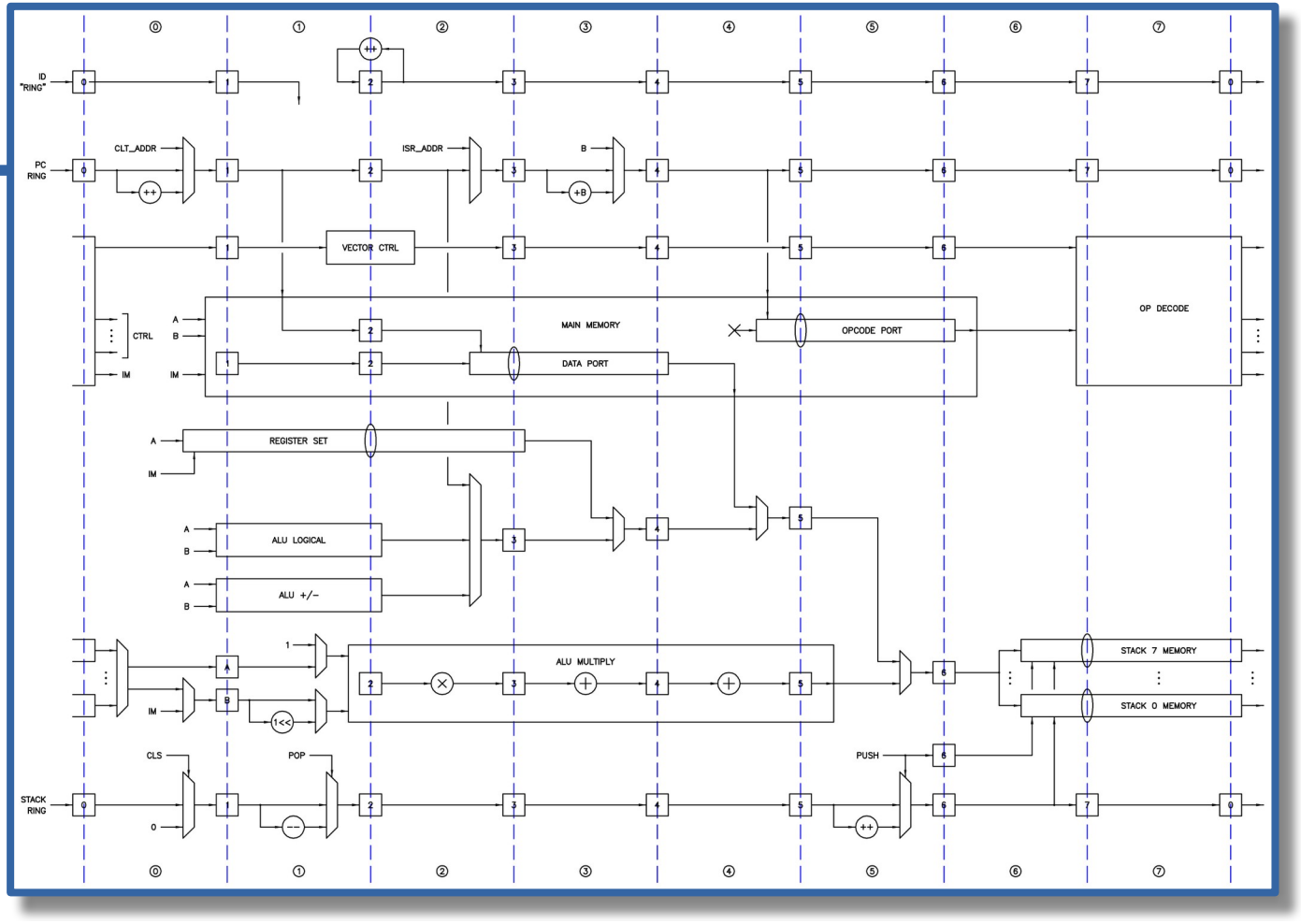

Librarian

- Manage presets
- Update software
- Remote control
- Command line interface (CLI)
- Written in Go
- Win, Mac, Linux, Raspberry Pi, etc.

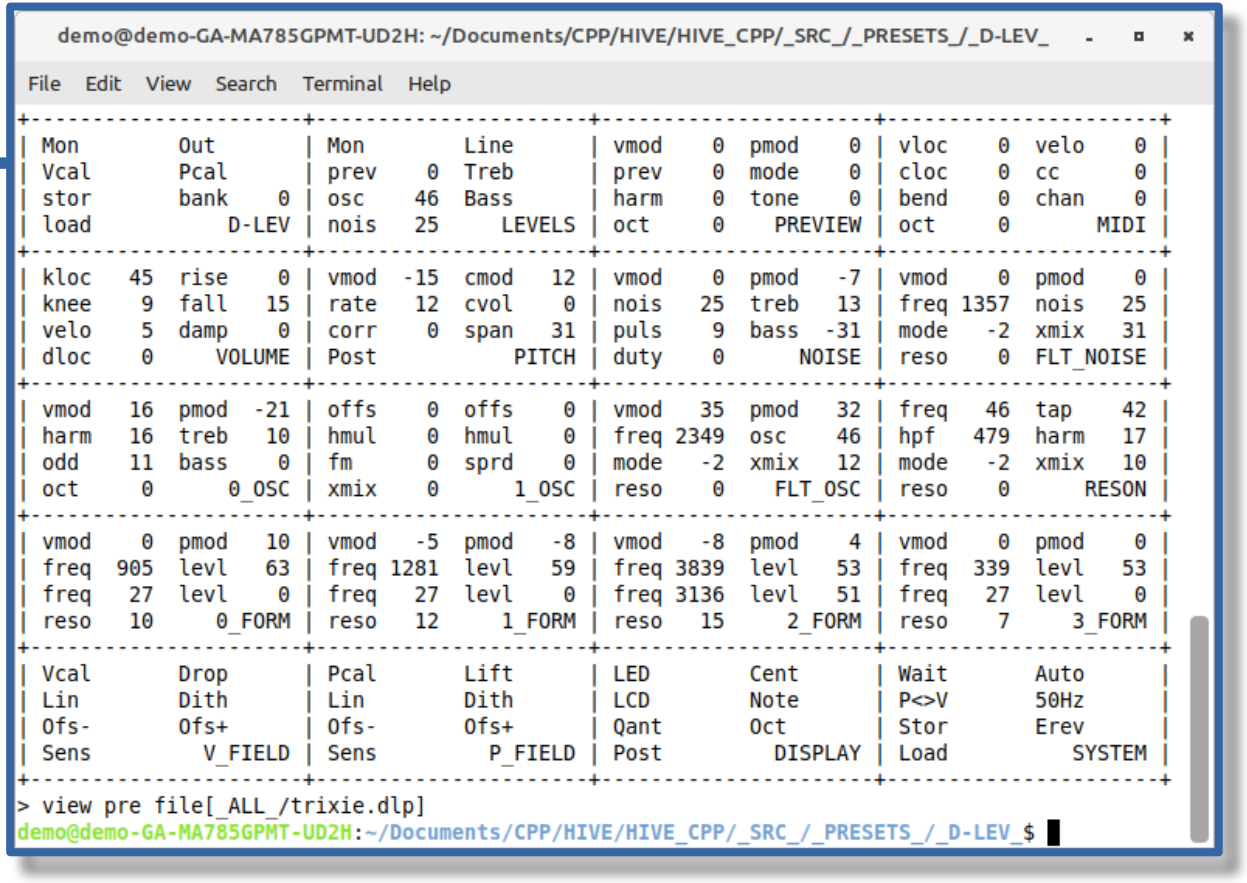

Opportunities = Future Directions?

- Reversed volume field w/ shaping & velocity
- Looser pitch field
- Interactive tuner use
- Pitch correction
- Plates rather than rods
- More robust fields
- Better ergonomics
- Third field for dynamics

D-Lev Kit

- Get design out, feedback from builders & players
- Social phase of project
- 46 made, sent all over the world
- Users supply cabinet & antennas
- 1 week to 3D print & build, $250 parts, 4lbs to ship
- Profit / loss neutral
- Open source

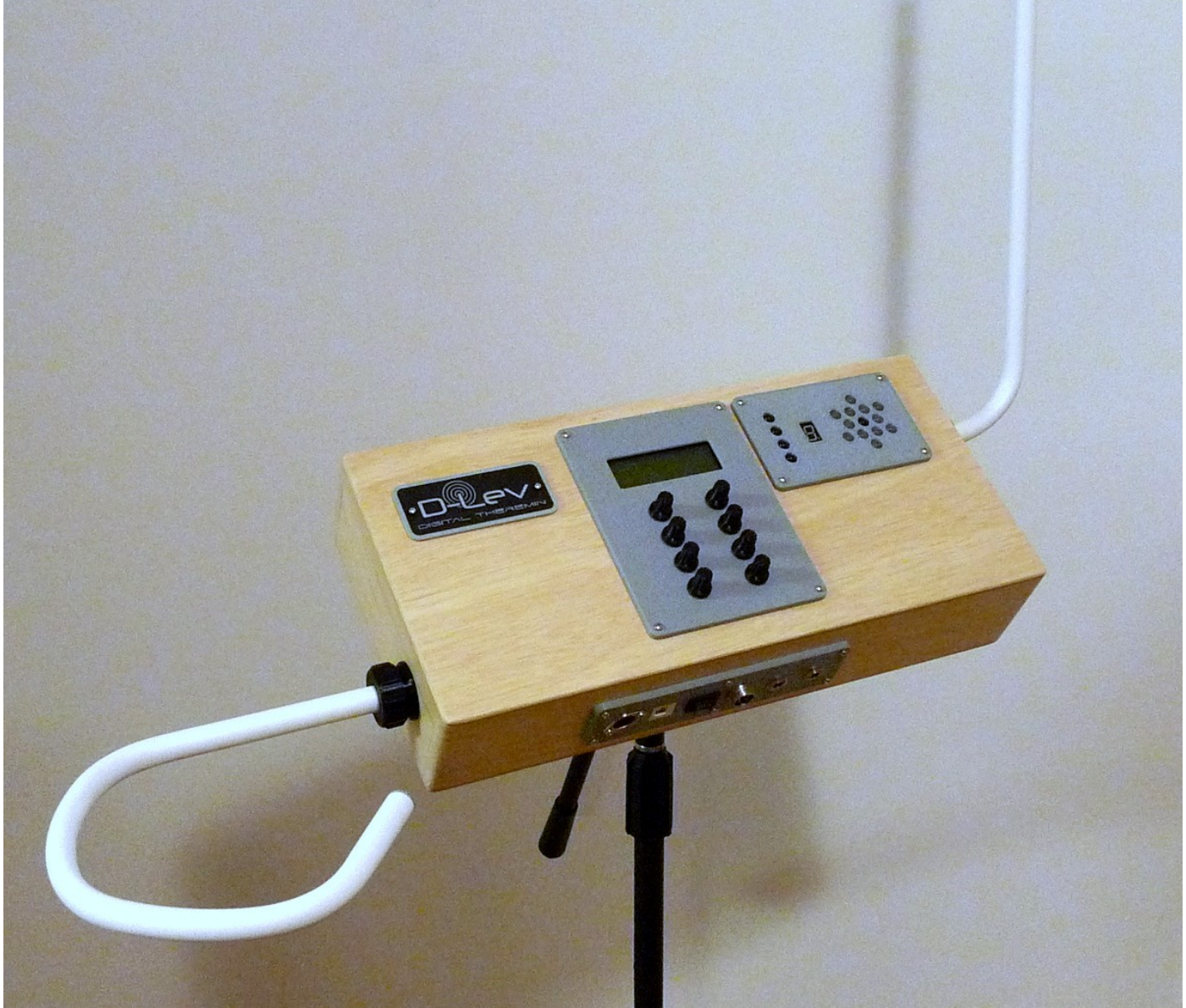
DLeV
DIGITAL THERAPEUTIC

CAP-OPOLY

Bachiana Brasileira nº 5
Villa-Lobos

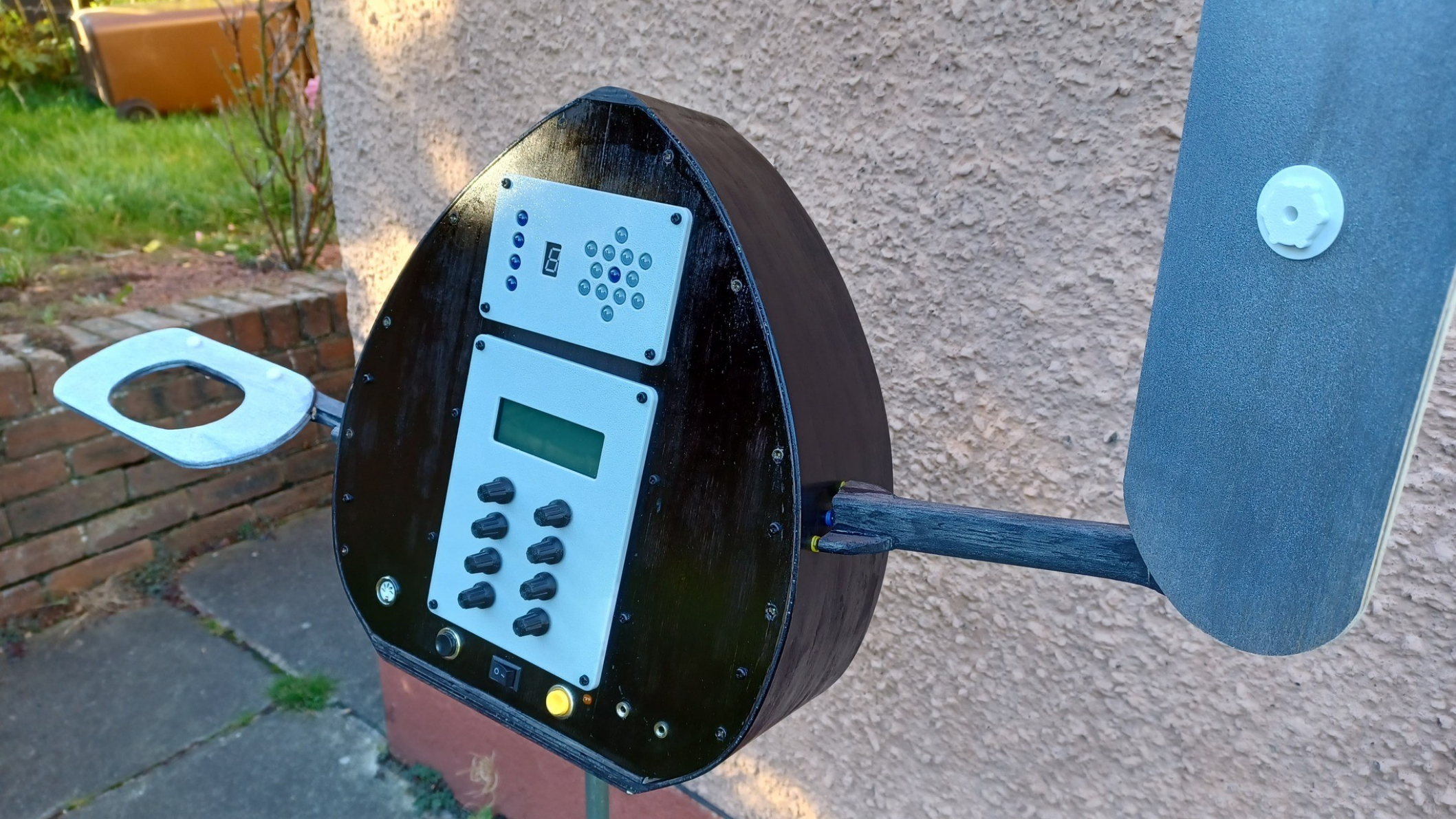

STRUCTURES
STRUCTURES
STRUCTURES
STRUCTURES
STRUCTURES

FISHMAN

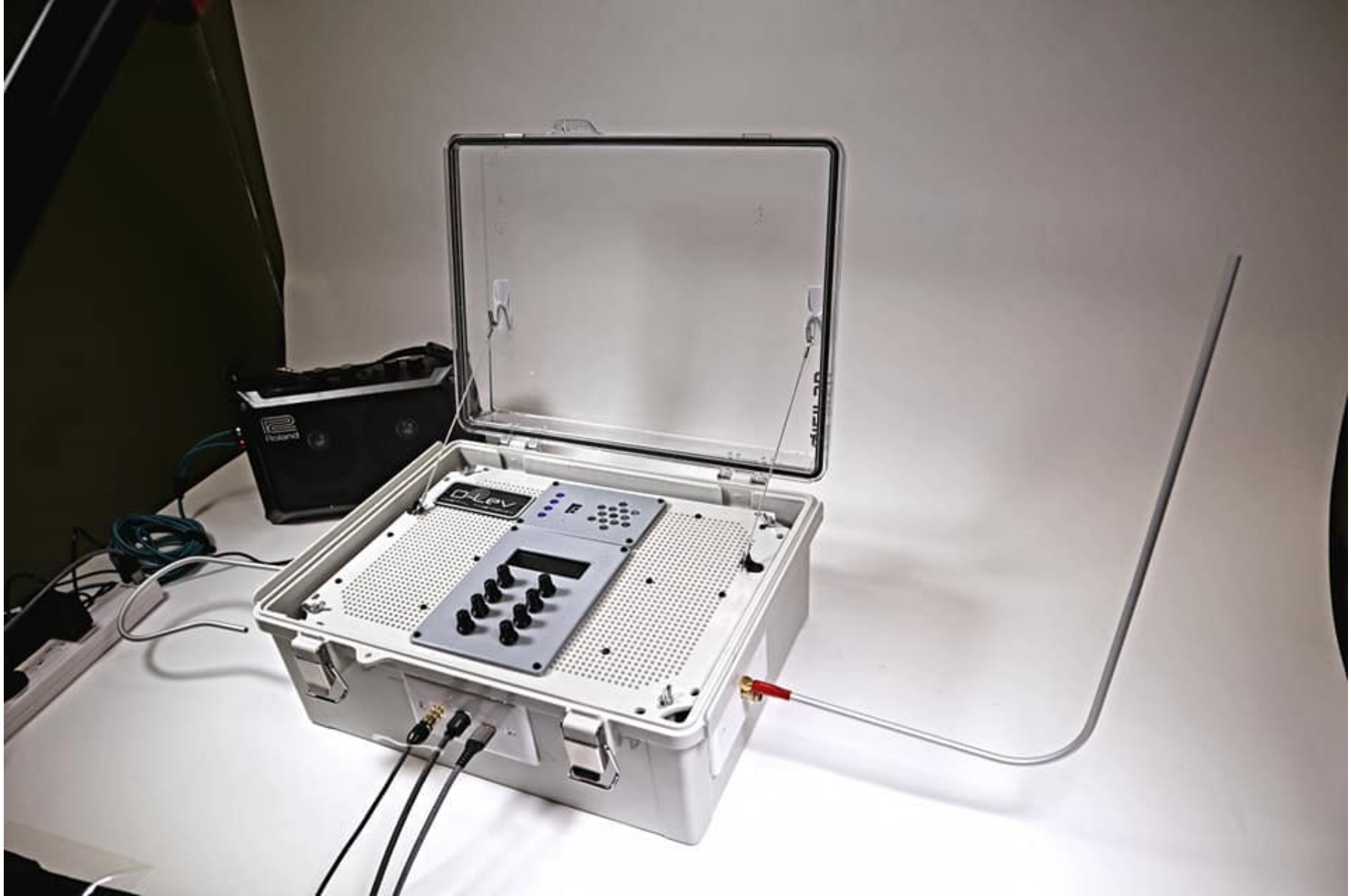
Roland
D-Lev

D-Lev
DIGITAL THEREMIN

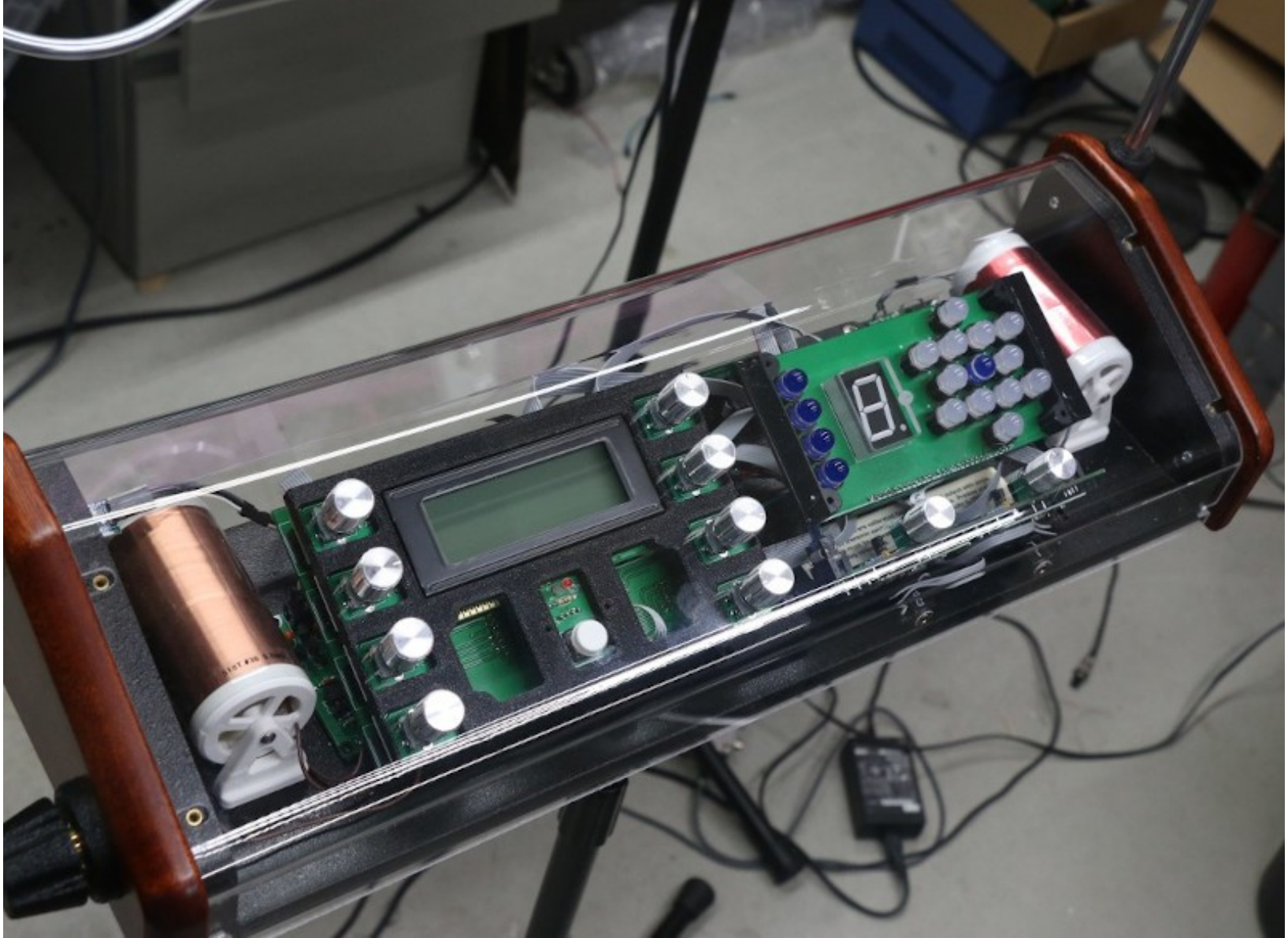

Gateway
SAMSUNG
D-Lev

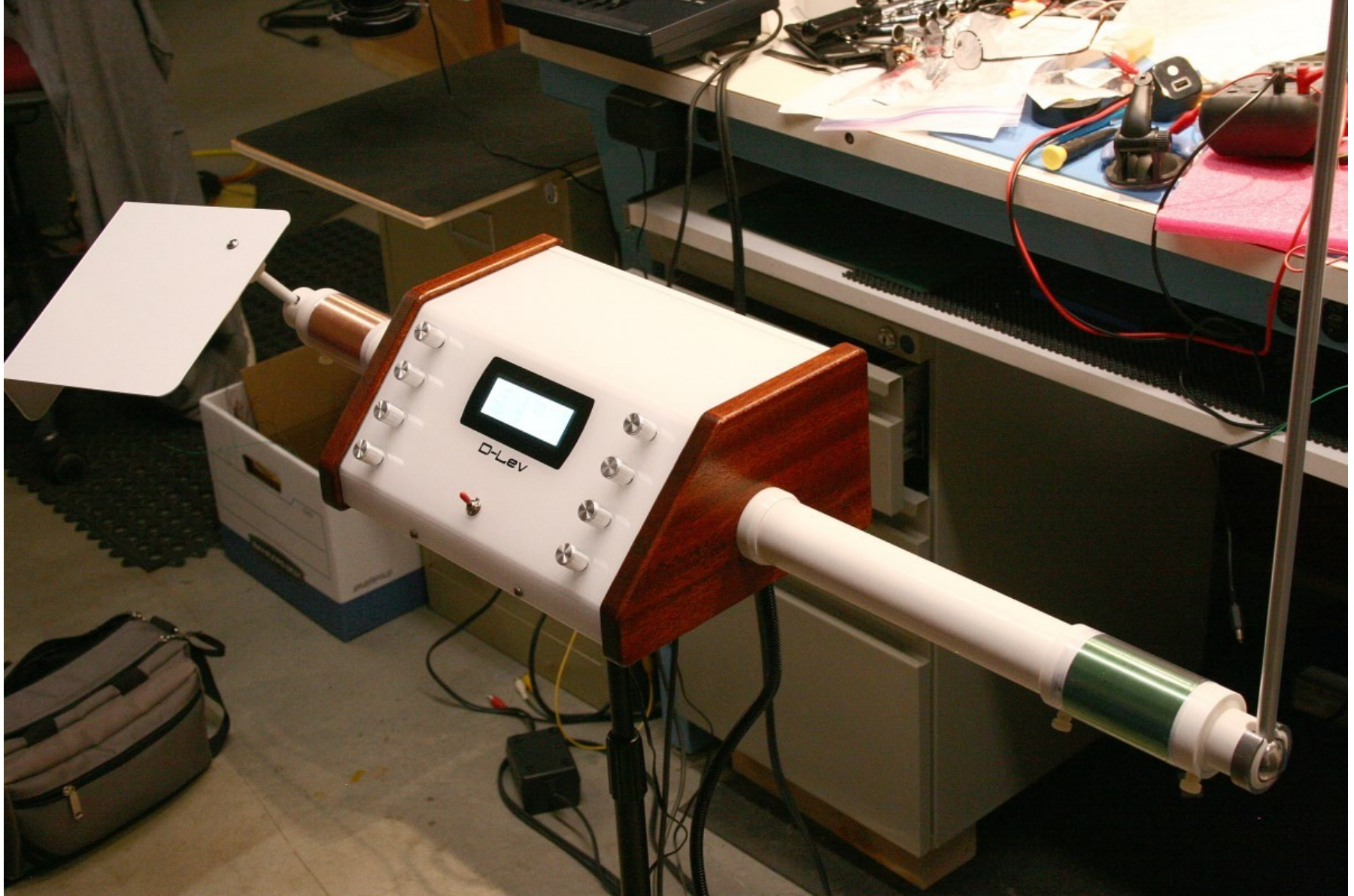
D-Lev

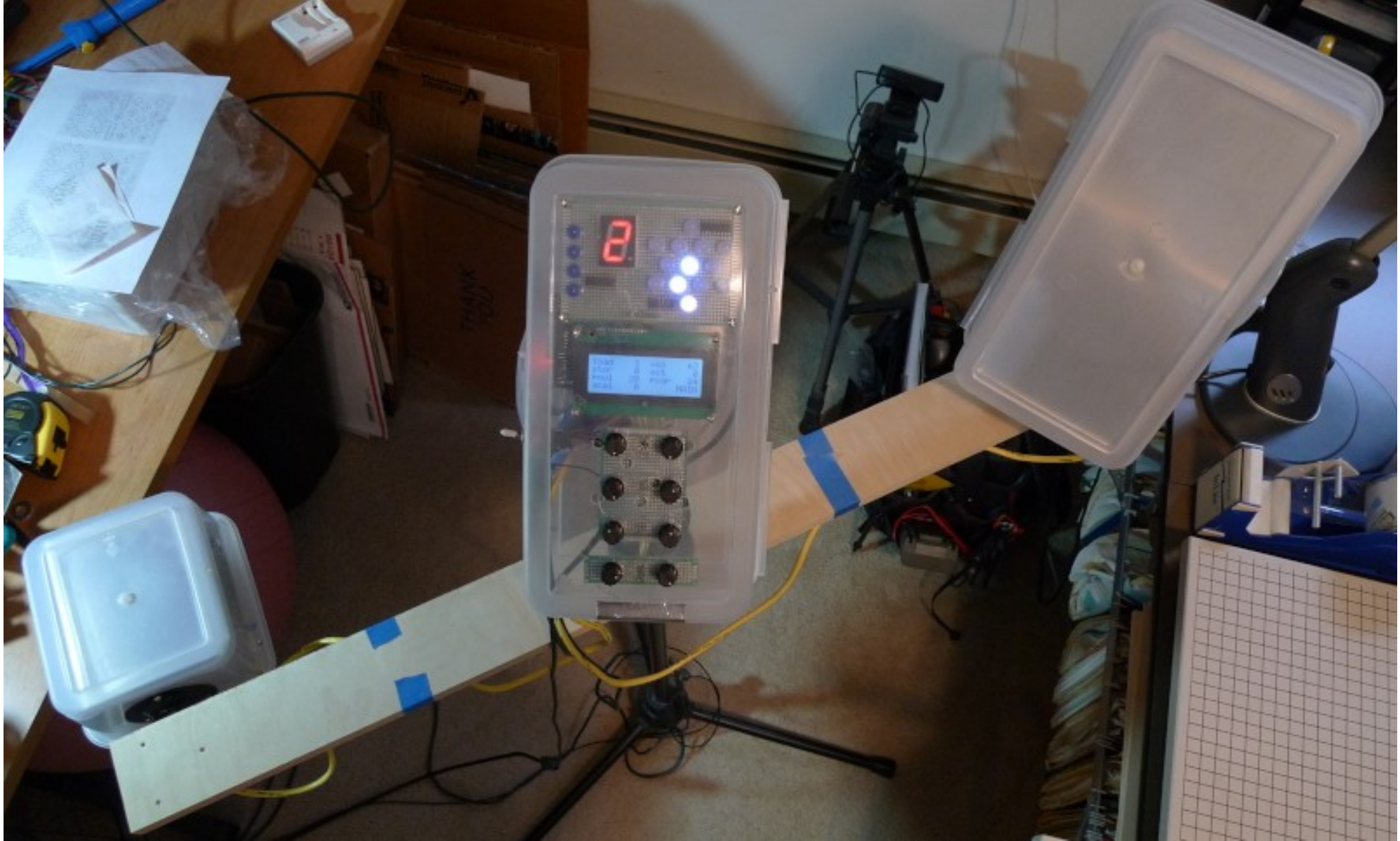

Thank You!

More info:

d-lev.com
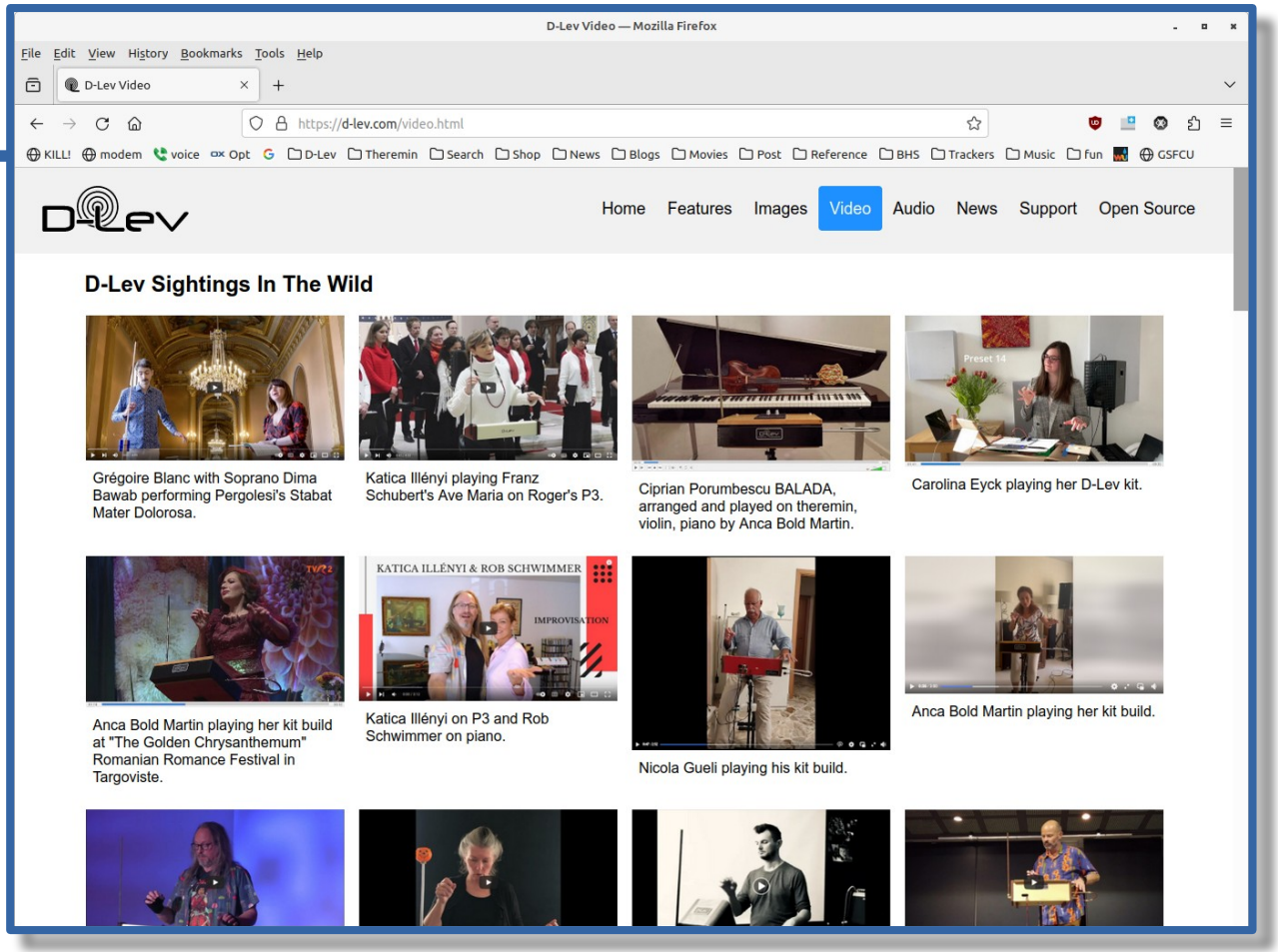
thereminworld.com